R-201

SKU: R-201
Product Categories: Home Entertainment
Product Tags: tv stand
Product Page: http://grandprixlimited.com/product/r-201/

Product Summary

- UV painted particle Board - Glossy Mahogany Finish **Dimensions:** 44.5"wide x 37" high x 17.75" deep

Product Description

- Storage for all Entertainment equipment - Maximum weight capacity for TV shelf is 33 lbs.
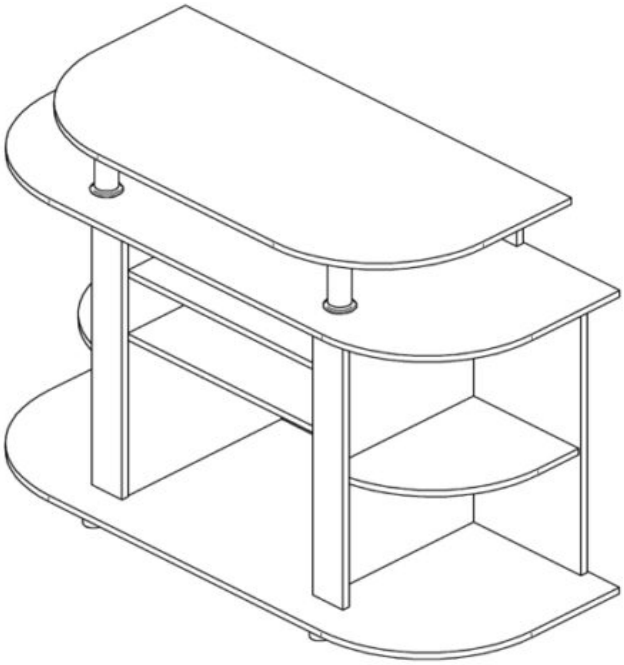
Product Gallery